Auto Show to Be of Interest to Women Drivers

Special Features of Cars for Beauty and Comfort Are Stressed This Year.

The nineteenth annual Omaha automobile show at the Auditorium, the week of February 18, will hold unusual interest this year for the woman motorist. The outstanding changes in the new motor cars are of a type that will attract her attention.

Mechanical improvements, changes in the engine and chassis do not hold so much interest for the average woman driver. Appearance, comfort, ease of operation, safety, absence of minor troubles and convenience are points she considers.

Many new features of the 1924 cars are right along these lines. The displays at shows cater to closed models. And the makers of even the lowest-priced cars have paid great attention to the body and lines of the car. In the closed models the coach makers' art reaches its height. Never Before have such beautiful models been shown.

Brake improvement is interesting as a matter of easy operation and a factor of safety. During the year the four-wheel brake has sprung into great prominence. Of 73 manufacturers exhibiting cars at New York about 30 have adopted this type, either as standard equipment or optional at extra cost. Other manufacturers have retained the two-wheel brake, with improvements.

The balloon tire is another feature of the shows. It gives the car a lower, longer appearance. Advocates claim it gives greater comfort in riding, less tire trouble, and longer car and tire life.

Disk wheels have gained in popularity. There are fewer of the trunk-equipped type of closed cars being shown, and those on display have more substantial trunks.

Russians Honor Reed; Want Painting of Him

London, Jan. 26.—The bolshevist government, it is learned here, is establishing a large agricultural college to be known as the "John Reed Agricultural school," named after the American writer and communist who died two years ago in Moscow. They are now taking steps to secure some pictures of Reed to be hung in the large mess hall and are especially anxious to secure a "strong" oil portrait of him to be hung in a position of honor; the suggestion is that perhaps some Greenwich Village artist who knew him could do a portrait of him. The only stipulation is that it must be satisfactory to his widow.

Build a Neutrodyne

We have all the parts in stock. Complete instructions, expert service. Hundreds in use. Tune out local interference completely.

THE RADIO SHOP
Frank S. Selby, Mgr.
308 S. 18th St. JA 1434

THE BRANDEIS STORE

Monday—Our

Radio Department

Will Be Bargain Center for Radio Fans

Set of Freed-Eisman Neutroformers and Condensers, 24.00
2.50 Cockaday Coils, 1.95
Michigan Midget—One-tube set, 1,500-mile range, complete for 41.50
6.50 W. D. 12 and W. D. 11 Tubes, 5.00
25.00 Radiola No. 1 Crystal Set—With head phones; special at 10.00
6.00 Brandes Superior Head Set—Special at 4.95
1.50 C. R. L. Variable Grid Leaks—Special 1.15
Marco Variable Grid Leaks—Special at 1.35
2.25 Grewol Variable Grid Leak—Special at 1.95
2.00 Bradley Leak—Special at 1.65
Howard 40-Ohm Rheostat—Priced at 1.00
Howard 25-Ohm Rheostat—Priced at 1.00
Howard 6½-Ohm Rheostat—Priced at 1.00
7.00 Hilco Vario-Coupler—Special at 6.45
Day-Fan Moulded Variometers—Priced at 5.50
Day-Fan Moulded Vario-Couplers—Priced 5.50
7.50 Columbia Moulded Split Variometers—Special at 4.95
Pioneer Moulded Vario-Couplers—Special 6.00
6.00 Authorized Cockaday Coils—Special at 4.95
Three-Inch Bakelite Dials—Priced at 25c

Indoor Spring Aerials—For crystal set, special at 95c

Harris Tube Battery Charger—Special at 10.95
Bakelite Tubing—All sizes, per running inch 10c
Supertone Loud Speaker and Unit—Very special at 15.00
Magnavox—Type R-3 and M-1; priced at 35.00
18.50 Gold Seal Homecharger—Special at 16.95
B Batteries—22½-volt, large size; special 1.95

Dry Cells—Special at 35c

Main Floor—Arcade

The RADIO NEWS

For the Amateur and the Expert

Neutrodyne Proves Success

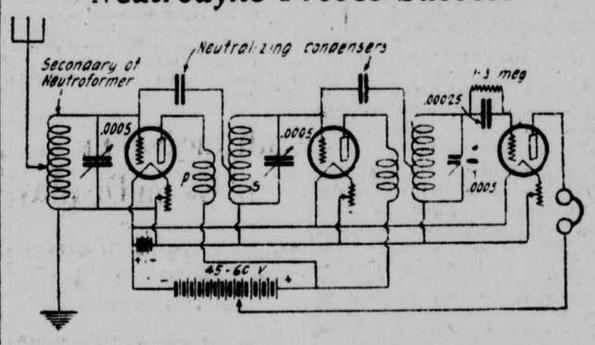

The Neutrodyne circuit, using two stages of radio frequencies. The secondard of the first Neutroformer is used as the tuner. Drawing by courtesy of the Radio News for January.

It is not the intention of the writer to give a complete description of mechanical construction of Neutrodyne circuit as blue prints and wiring diagrams are available at the better radio shops. It is my belief that many radio fans are interested in how they work and to what details their success is due. The first stage of the Neutrodyne set is in itself a reproduction of a simple nonregenerative hookup and by varying the condenser the natural wave length of the set can be altered. The second stage is exactly like the first. It will be noticed that the plate circuit of the first tube is not tuned, but that the grid circuit of the second tube, as well as the grid circuit of the first tube are both tuned. The third stage is added in exactly the same way as the second stage and is tuned only in the grid circuit. So far you have really a two-stage radio frequency amplifier and detector. Each stage being tuned in the grid circuit.

This circuit would give very wonderful results if it were not for the internal capacity coupling between the plate and the grid circuit of each radio frequency tube and it is in the elimination of this internal capacity coupling that the Neutrodyne set develops its wonderful clearness of tone and extremely sharp tuning.

This internal capacity is neutralized by the combination of capacity and inductance. The inductance by the winding of the air core radio frequency transforming the capacity is taken care of in the small neutralizing condensers. Once the small condensers are adjusted to their proper capacity no further adjustment is required to have the set operate equally well on its entire range of wave lengths.

It is well for those who desire to build their own Neutrodyne receivers to be very careful in the mounting of the various instruments, especially the neutroformers, which should be mounted not less than six inches apart and at such an angle that a line drawn at right angle to the access at the end of the winding does not intersect the winding of the adjoining transformer. The proper value of the neutralizing condensers must be determined separately.

If the set is properly constructed, it will give very wonderful results in clearness and sharpness, the volume is not extremely loud, but audio frequency can be added in the usual manner. Unlike most sets the plate circuits of the detector tube will stand extremely high voltage without affecting its clearness.

WOAW Radio Programs

Following are the radio programs to be broadcast from station WOAW, the Woodmen of the World Life Insurance association, during the week beginning Sunday, January 27:

Sunday, January 27.

9 A. M.—Radio Chapel Service conducted by Rev. R. R. Brown of the Omaha Gospel Tabernacle of the Christian and Missionary Alliance, 2006 Douglas street, and minister of the Sunday Morning Radio congregation, and his associates.

6 P. M.—Bible study hour under personal direction of Mrs. Carl Gray.

9 P. M.—Musical chapel service by courtesy of Zion English Lutheran church, Rev. Nels Lundgren, pastor. Auspices Woodmen of the World.

Anthem—"O Lord I Will Praise Thee" ..... Demarest
Incidental solo, F. A. E. Hanson.
Scripture Reading and Prayer.
"That Beautiful Land" ..... Jones
Male Quartet.
B. E. Johnson, Christian Larson, Walter Munson, F. A. E. Hanson.
Piano solo ..... Selected
Eva Nelson.
Vocal solo, "In the Garden" ..... Miles
Rev. Nels Lundgren.
(By special request.)
Soprano solo, "Abide With Me" .... Spence
Mrs. Ellen Furnish.
Anthem, "Out of the Dark Lord" .. Blount
Incidental solos.
Lillie Anderson, F. A. E. Hanson.
Sermon, "None Other Name," Acts 4:12.
Rev Nels Lundgren.
Soprano solo, "All the Way My Savior Leads Me."
Lillie Anderson.
Anthem, "Hymn to the Trinity" ..... Tschaikowsky
Soprano solo ..... Selected
Mrs. Herschel Woodis.
Anthem, "Onward Christian Soldiers" ..... Shelley
Benediction and Three-Fold Amen.
Choir Director, Bernard Johnston.
Organist, Eva Nelson.

Monday, January 28.

6:30 P. M.—Dinner program presented by Randall's Royal orchestra, transmitted from Brandeis restaurant.

9 P. M.—Program arranged by Frank Buckingham, prominent instructor in banjo, mandolin and guitar. Auspices Stockyards National bank.
(a) March, "The Minstrel Man" .... Stahl
(b) "Breath of Spring" ..... Buckingham
Omaha String club.
Soprano solo, "Tell Me" ..... Buckingham
Grayce Jackson.
Mando-Cello solo, "A Dream" ..... Odell-Bartlett
Mr. Tipton.
Guitar accompaniment by Mr. Buckingham
(a) "Pilgrims Chorus from Tannhauser" ..... Odell-Wagner
(b) "Sing Ling Ting"
Omaha String club.
Mandolin solo, "Cavatina" ..... Schmidt
Mr. Buckingham.
Mrs. Koch, accompanist.
Soprano solo, "The Hand of You" .... Bond
Grayce Jackson.
(a) "Beautiful Night" ..... Offenbach
(b) "Lady Meddlesome"
Omaha String club.
Banjo solo, march, "Collar City" ..... Buckingham
Mr. Buckingham.
Mrs. Koch, accompanist.
Soprano solos.
(a) "Love's Old Sweet Song"
(b) "Marcheta"
Grayce Jackson.
Accompanied by Omaha String club.
Intermezzo, "Cavaleria Rusticuna" ..... Odell-Mascagni
Omaha String club.
Mando-Cello solo, "Lee Cygne"
Mr. Tipton.
Miss Tipton, accompanist.
"Rococo" ..... Schick-Aletter
Omaha String club.
Mandolin solo, "Hawaiian Air" .... Kamili
Mr. Buckingham.
Mrs. Koch, accompanist.
Intermezzo, "Lion du Bal" .. Odell-Gillette
Omaha String club.
Soprano solo, "Love's Sorrow" .... Schultz
Grayce Jackson.
Accompanied by Omaha String club.

Tuesday, January 29.

6:30 P. M.—Dinner program presented by Carl Lamp's orchestra of Keep's Dancing academy.

9 P. M.—Concert program presented by Seventeenth United States infantry band, Herman Webel, bandmaster. Auspices U. S. National bank.
March ..... Webel
Overture, "Orpheus" (in der unterwelt) ..... Offenbach
Selection on Favorite Melodies ..... Safranek
"The Hall of Fame."
Raccozy.
Celeste Aida.
Entry of the Gladiators.
Melody In F.
Prelude Rachmaninoff.
Peer Gynt.
Humoresque.
First Rhapsody.
Waltz, "L Estudiantina" ..... Waldteufel
Selection, "Mlle. Modesie" ..... Herbert
Suite in Four Parts, "Atlantis" ..... Safranek
Descriptive, "The Ambuscade" ..... Laurendeau
"Danse Espanole" ..... Lacome
Selection on "Russian Melodies."
"Echoes From the Volga" ..... Seredy
Fox Trot, "Oh You Little Sun uv er Gun."

Thursday, January 31.

6:00 P. M.—Every child's story hour conducted by Grace Sorenson, editor and publisher of Every Child's magazine.

6:30 P. M.—Dinner program presented by Hugo Heyn's orchestra.
Talk on "Modern Tendencies in Dance Music," by Hugo Heyn.

Elk's Night.

9:00 P. M.—Program by courtesy of B. P. O. E. No. 39, Omaha. Arranged by Henry G. Cox. Auspices Merchants National bank.
March, "Hungariana" ..... Lake
Elks' Band.
Overture, "Barber of Seville" .... Rossini
Elks Band.
Remarks by John H. Killian (exalted ruler, Omaha lodge No. 39).
Violin Solo, "Midnight Bells" ..... Krakauer-Kreisler
Henry Cox. Mrs. Cox, accompanist
Waltz, "Wonderful One" (by request) ..... Whiteman
Elk's Band (Henry Cox, director)
Vocal Solo, "Mother Machree"
John McCreary.
Address, "Our New Building"
Judge E. C. Page, past exalted ruler
Selection
Elk's Quartet, Council Bluffs, lodge No. 631.
Selection, "Kalinka" ..... Frimi
Vocal Solo, "The Little Gray Home in the West" (by request.
Miss Loretta Scheibel
Recitation
Charles R. Docherty, past exalted ruler.
"The World Is Waiting for the Sunrise" ..... Lockart
Elks' Band.
Vocal Solo, "Maid O Dundee"
John McCreary.
Selection, "Rhapsody 'Slavonia'" ..... Friedemann
Address, "Bachelorhood vs. 1924 Leap Year"
T. B. Dysart, past exalted ruler.
"Trombone Blues" ..... Jewell
Elks' Band.
Adress, "New Members"
W. Johnson, esteemed loyal knight
March, "Hello Bill" ..... Bethel
Elks' Band.
Address, "Social and Community Welfare Work of Omaha Lodge No. 39."
Dr. M. J. Ford, chairman of committee.
"The 11 O'Clock Toast"
A. V. Heckman, past exalted ruler.
Personnel of Council Bluffs Quartet: J. R. Gerke, first tenor; A. E. Benston, second tenor; C. S. Haverstock, baritone; J. F. McCargar, bass.

Friday, February 1.

6 p. m. dinner program presented by Ackerman's orchestra of Empress Rustic Garden Dance Palace.

9 p. m. Old fashioned program by courtesy of Byers Bros. & Co. Auspices Stockyards National bank.
Harmonica and Piano Selections.
Mr. and Mrs. C. W. Owen.
Readings and Dialects.
H. G. Kiddo, C. W. Owen, Roy Greer, Hollis E. Gamerl.
Duets and Solos.
Lillie Anderson, Hollis E. Gamerl
Mixed orchestra.

Saturday, February 2.

6:30 P. M.—Dinner program, presented by the Blackstonians; Walter Schimmel, manager.

9:00 P. M.—Program presented by Pollyanna's Syncopators of Lincoln, through courtesy of Lincoln Telephone and Telegraph company.
"Maggie," "Oh, Sister, Ain't That Hot?"
Pollyanna's Syncopators.
"Sildus" Trombonus," trombone solo ..... M. L. Lake
Bernice Kerr.
"Sweet Henry," "Cross-eyed Papa"
Pollyanna's Syncopators.
"Peristyle Polka," cornet solo ..... W. Paris Chambers
Gladys Young.
"WOWL," "Easy Melody"
Pollyanna's Syncopators.
"Saxophobia," saxophone solo ..... Ruby Wiedoeft
Emma Novy.
"Sobbin' Blues," "Sunshine"
(Words and music by our own Miss Novy, saxophonist.)
"Everytime," "Mean, Mean Mamma"
Pollyanna's Syncopators.
"Song of India," violin solo ..... Rimsky-Korsakoff
Ruth Smith.
"Lover, Come Back," "I'm Sitting Pretty in a Pretty Little City."
Pollyanna's Syncopators.
"Nola," piano solo ..... Felix Arndt
Henrietta Kreamer.
"I've Got a Song for Sale," "That Brand New Gal" ..... Pollyanna's Syncopators
"I'm Waiting for the Sunrise" .. Kempton
(Cornet, trombone and saxophone trio, arranged by Ruth Smith, director.)
"Hugo," "Goodnight, WOAW"
Pollyanna's Syncopators.
(Words and music by Miss Novy and Miss Smith.)

Pair Held at Beatrice for Passing Bad Check

Special Dispatch to The Omaha Bee.

Beatrice, Neb., Jan. 26.—O. A. Cooper and Solomon Steinmetz were brought here and lodged in county jail, having been bound over at Wymore, Neb., for aiding in passing a forged check for 210 bearing the name of Charles Fulton, Wymore, who is serving a jail sentence at Lincoln on a liquor charge.

Stromsburg to Vote on Public Swimming Pool

Special Dispatch to The Omaha Bee.

Stromsburg, Neb., Jan. 26.—The Commercial club here is considering the question of putting in a swimming pool this spring and it will be voted on whether to make it municipal or a privately owned concern.

The proposition is to syphon the water from the Blue river to Buckley park.

Keep Water Out of Engine.

"Some folks claim that oil and water do not mix," says Arthur G. Zeller, president of the Michigan State Automobile school, Detroit. "This may be true enough but you will find that both lubricating oil and gasoline absorb a considerable percentage of water and introduce it into the 'innards' of your automobile. By all means flush and drain the gasoline tank at least twice each year."

Bee Want Ads Produce Results.

Electrical Inspectors Gather Here Jan. 29

Nineteenth annual meeting of the Western Association of Electrical Inspectors will be held January 29, 30 and 31 at Hotel Fontenelle.

Mayor James Dahlman will deliver the address of welcome at the opening session.

Other addresses will be made during the convention by William B. Hubbell, Cincinnati, O., first vice president of the organization; George A. Lee, counsel for the Continental Gas and Electric company, Omaha; Horace M. Davis, district publicity director of the National Electric Light association; Harry B. Kirkland, Hartford, Conn., and Dana Pierce, Chicago, Ill.

During the second day there will be a discussion of the interpretation of rules contained in the 1923 edition of the national electrical code, by chairmen of various committees.

Officers of the organization are F. O. Evertz, president; W. B. Hubbell, first vice president; J. A. Hoeveler, second vice president; William S. Boyd, secretary and treasurer.

Schwab Gives Away Stutz.

Just before sailing for Europe, Charles M. Schwab, steel magnate and principal stockholder in the Stutz Motor Car Company of America, Inc., announced that he had presented one of the famous Stutz speedway four models to Sir Robert Horne, former chancellor of the exchequer of Great Britain.

A new Russian city, to be called Novgorod Lenine, in honor of the soviet premier, is planned in the Mugan district of the Caucasus.

Suspect Held in Pool Hall Fire at Macy, Neb.

Sioux City, Ia., Jan. 26.—Investigation of the fire which destroyed a pool hall at Macy, Neb., August 21, 1923, and cost the life of Abe Hammert, resulted in the arrest of Arthur Kyriss of Macy in Sioux City Saturday.

Kyriss is being held at the Sioux City police station on a charge of carrying concealed weapons.

Authorities will make a fight to take Kyriss back to Nebraska.

Kyriss is proprietor of a pool hall at Macy and prior to the fire great rivalry existed between the two establishments.

When evidence of incendiarism was discovered following the blaze which cost Hammert's life, suspicion was directed toward Kyriss, Sheriff H. C. Jensen says.

Turkish Prohibition Is Seemingly Foredoomed

Constantinople, Jan. 26.—Continued ill-luck, seems to dog the steps of the Turkish prohibitionists.

Following repeated postponements of the application of the new law, and its ultimate enforcement its unpopularity is increasing with the knowledge that heavy penalties for its infringement have gone hand in hand with its open contranvention, and that delinquents owing to the faulty construction of the law, cannot be punished even when caught bootlegging.

Steinite The Marvelous New Crystal **Gives Distance On Crystal Sets!**

Underwriters Fire Patrol
KANSAS CITY, MO.

Steinite Laboratories
Atchison, Kansas

You certainly have the greatest crystal I have ever used—and I have used them all. Your STEINITE is the greatest for volume and distance I have ever tried.

Just for example let me tell you what I did with STEINITE last night. I picked up the St. Louis Post Dispatch. Also heard Omaha and Davenport. Now that's remarkable.

When U D A P, The Kansas City Star is in the air, I attach a small tin horn to one receiver, shunt the other and throw the entertainment out into two large rooms. STEINITE is a REAL crystal. You can refer any doubters to me.

W. G. Gardner
Secy. K.C. Fire Patrol Dept.
Kansas City, Mo.

RESULTS truly amazing like Mr. Gardner tells in his letter. Everyone astonished by STEINITE. J. A. Zeugin, Leavenworth, Kans., writes, "So far have caught Chicago, Dallas, St. Louis, Davenport and several others on my crystal set with your STEINITE crystals. Carl McGraw, Independence, Mo., says, "The first night I heard Fort Worth, Tex., Omaha, Nebr., St. Louis, Mo., and WJAZ and KYW at Chicago, Ill."

You can't doubt what you hear with your own ears. Listen in on STEINITE at my risk. Read my guarantee and offer—then act.

Introductory Price NOW 50c Each SPECIAL 3 for $1.00

You are buying no ordinary crystal when you order STEINITE. It's an entirely new discovery. Opens up new possibilities for crystal set receivers. STEINITE CRYSTALS are being imitated. None Genuine unless stamped S

My Money-Back GUARANTEE

I unreservedly guarantee STEINITE to give you better results than you ever thought possible on your crystal set, and if you are not surprised and more than pleased I will send back your money without any question.

Manufacturers of Famous Stein $10 Tube Sets and Long Distance Crystal Sets $5. FREE descriptive literature on request.

These two big Atchison banks will testify to my reliability: Exchange National Bank, Atchison Savings Bank. Don't delay the radio treat in store for you. Order Three STEINITE crystals today—NOW. None genuine without letter S stamped on side.

STEINITE LABORATORIES Dept. 36, Radio Bldg., ATCHISON, KANSAS.

Ford
THE UNIVERSAL CAR

Forecasting A Tremendous Spring Demand

739,626

more Ford cars and trucks were produced last year than the previous year, an increase of over 50 per cent.

In spite of this tremendous increase in production, it was impossible to meet delivery requirements during the spring and summer months when orders for 350,000 Ford Cars and Trucks could not be filled.

This year winter buying for immediate delivery has been more active than ever before—and in addition 200,000 orders have already been booked through the Ford Weekly Purchase Plan for spring delivery.

These facts clearly indicate that the demand during this spring and summer will be far greater than ever, and that orders should be placed immediately with Ford Dealers as a means of protection against delay in securing your Ford Car or Truck or Fordson Tractor.

Ford Motor Company
Detroit, Michigan

A small deposit down, with easy payments of the balance arranged, or your enrollment under the Ford Weekly Purchase Plan, will put your order on the preferred list for spring delivery.

See the Nearest Authorized Ford Dealer

NEUTRODYNE

The Choice of the Man Who Knows

FREED-EISEMANN 5-Tube Set, $150.00 | **GAROD** 4-Tube Set, $135.00

Either of these sets are so constructed that they are not affected by local interference. W. O. A. W. does not interfere with your reception of other large stations from coast to coast.

Ease of operation, can be logged, clear reception, selectivity, volume.

These are some of the features that make the Neutrodyne the most popular radio set on the market today.

We are radio Engineers. We have an organization that combines service with sales. We distribute Crosley & Ace and Neutrodyne.

AUTO ELECTRIC & RADIO CORP.

Phone HA 0822 2817 Harney St. Omaha, Neb.